Lysine catabolism: a stress and development super-regulated metabolic pathway

Gad Galili*, Guiliang Tang, Xiaohong Zhu and Bertrand Gakiere

Lysine is a nutritionally important essential amino acid whose level in plants is largely regulated by the rate of its synthesis. In some plant tissues and under some stress conditions, however, lysine is also efficiently catabolized into glutamate and several other stress-related metabolites by novel mechanisms of metabolic regulation. Lysine catabolism is important for mammalian brain function; it is possible that the generation of glutamate regulates nerve transmission signals via glutamate receptors. Plants also possess homologues of animal glutamate receptors. It is thus likely that lysine catabolism also regulates various plant processes via these receptors.

Addresses
Department of Plant Sciences, The Weizmann Institute of Science, Rehovot 76100, Israel
*e-mail: gad.galili@weizmann.ac.il

Current Opinion in Plant Biology 2001, 4:261–266

1369-5266/01/$ – see front matter
© 2001 Elsevier Science Ltd. All rights reserved.

Abbreviations

EST	expressed sequence tag
LKR	lysine ketoglutarate reductase
SDH	saccharopine dehydrogenase

Introduction

Lysine is catabolized in plants via saccharopine into glutamate, pipecolic acid and acetyl Co-A ([1,2]; Figure 1). Two enzymes linked on a single bifunctional polypeptide catalyze the first two steps of this pathway [3–5]. Lysine ketoglutarate reductase (LKR) first combines lysine and α-ketoglutarate into saccharopine. Saccharopine dehydrogenase (SDH) then converts saccharopine into α-aminoadipic semialdehyde and glutamate. The first clue to the physiological function of lysine catabolism in plants was the demonstration that LKR activity in tobacco seeds is stimulated by lysine; the increased activity of LKR is associated with reduced steady-state accumulation of free lysine in mature seeds [6]. The lysine-mediated stimulation of LKR activity in plant seeds is regulated by Ca^{2+} and by the phosphorylation of LKR holoenzyme [5,7•,8,9].

The biochemical properties of the bifunctional polypeptide LKR/SDH have been recently reviewed in detail [7•] and are therefore not extensively discussed here. Instead, we focus on recent observations regarding the regulation of LKR/SDH gene expression. These results, taken together with the biochemical properties of LKR/SDH, suggest that lysine catabolism in plants is a super-regulated metabolic pathway that has multiple developmental and stress-associated functions.

Figure 1

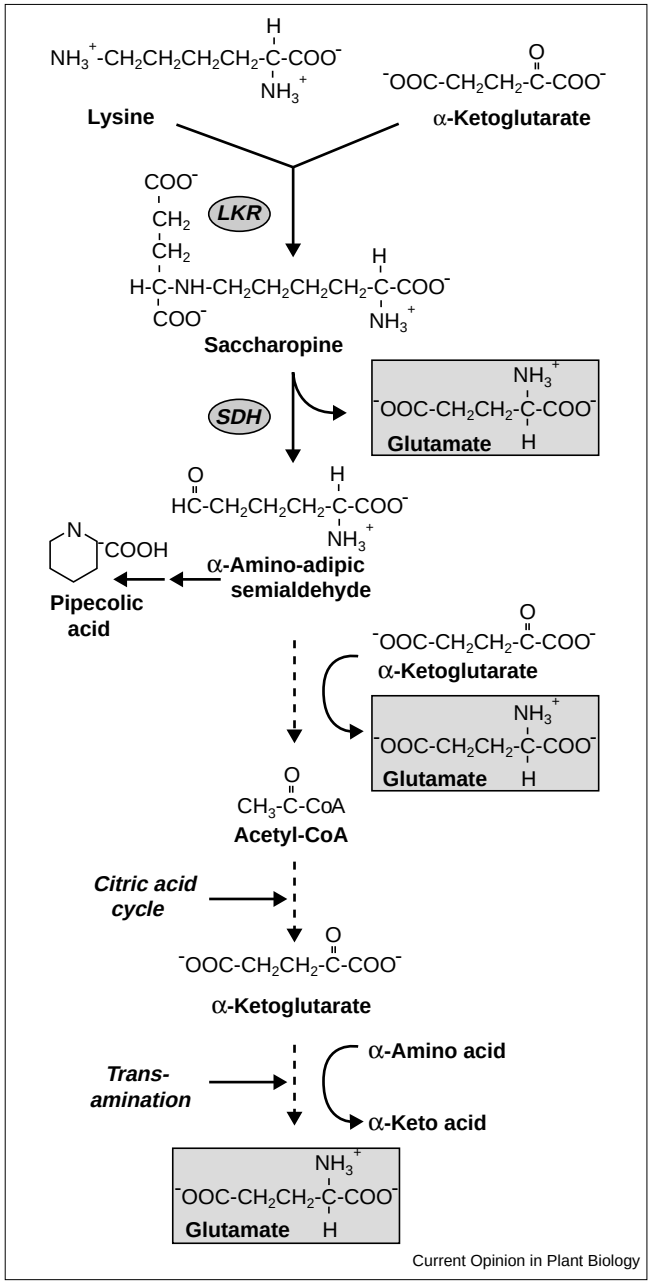

The lysine catabolism pathway of plants and metabolites derived from it. Broken arrows represent non-specified enzymatic reactions.

LKR/SDH gene expression is under complex regulatory control

The LKR/SDH gene is abundantly expressed in floral tissues and developing seeds. *In situ* mRNA hybridization suggests

Figure 2

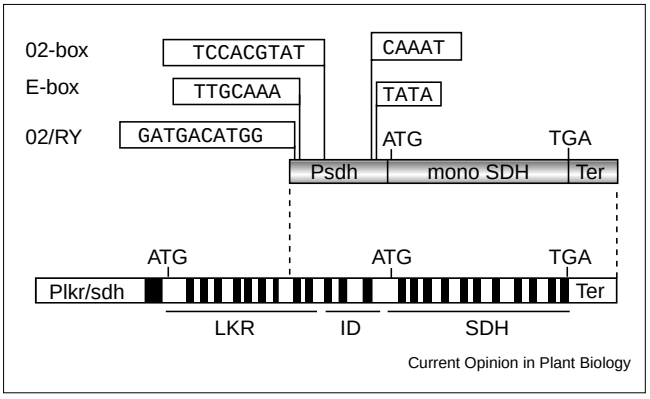

Schematic representation of the LKR/SDH locus (bottom scheme), as well as the autonomous monofunctional SDH gene that is an integral part of this locus (top scheme). The promoter of the monofunctional SDH gene (Psdh), which is located within the coding region of the LKR/SDH locus, contains putative TATA and CAAAT sequences, as well as consensus transcription factors binding sites, called the Opaque2 (O2), legumin (RY), and Endosperm (E) boxes. Black rectangles indicate introns, whereas empty rectangles indicate exons of the *Arabidopsis* LKR/SDH locus (bottom scheme). The regions encoding the LKR domain, the intermediate domain (ID), and the SDH domain of LKR/SDH are indicated below. ATG, translation initiation codons; Plkr/sdh, the upstream promoter of the LKR/SDH gene; Ter, transcription terminator; TGA, translation termination codon.

that the *Arabidopsis* LKR/SDH gene is upregulated in ovarian tissues, developing embryos, and the outer layers of the endosperm [10]. In developing maize grains, LKR/SDH gene expression is mediated by the Opaque2 transcription factor [11••], which also controls the expression of some classes of the zein storage-protein genes [12,13]. *In situ* analysis of SDH activity shows that the maize LKR/SDH enzyme is localized to the outer endosperm layers of the developing grain; there is little detectable SDH activity in the embryo [11••]. This observation is puzzling as the Opaque2-regulated zein storage-protein genes are specifically expressed in the inner part of the starchy endosperm [14]. Moreover, the low level of SDH activity in the embryo also contradicts the results of other studies [15•] showing that embryo-specific overproduction of lysine in maize results in significant accumulation of lysine catabolic products. It is possible that lysine may be transported from the embryo to the outer endosperm layer and be degraded there.

LKR/SDH gene expression is not restricted to reproductive tissues. LKR/SDH mRNA was found by differential-display analysis to be significantly upregulated in rapeseed leaves upon osmotic stress [16]. Moreover, the analysis of expressed sequence tags (ESTs) from a number of plant species suggests that the LKR/SDH gene is abundantly expressed in the dividing cells of various tissues, as well as in abscission zones and in tissues treated with biotic elicitors [7•]. Taken together, these results suggest that lysine catabolism may play regulatory roles in different developmental and physiological programs.

The LKR/SDH composite locus encodes three related but distinct enzymes in lysine catabolism

Another interesting property of LKR/SDH is that its two linked enzymes possess significantly different pH activity optima. The maximal activity of LKR occurs at neutral pH, whereas SDH has a pH optimum of pH 9 or above [3–5]. Because LKR/SDH is localized in the cytosol [11••,17], where the pH is relatively neutral, it is likely that the SDH activity of LKR/SDH is relatively inefficient *in vivo*. This implies that plants may require an SDH activity in addition to that provided by LKR/SDH to maintain efficient flux of lysine catabolism. One way to achieve this would be for the plant to express more SDH protein than LKR. Indeed, a monofunctional SDH mRNA and polypeptide was detected in *Arabidopsis* [10]. This monofunctional SDH is encoded by an autonomous gene, which is an integral part of the LKR/SDH gene and utilizes a part of the LKR/SDH coding region as an internal promoter to express the SDH open reading frame (Figure 2, [compare top and bottom schemes]) [18••]. Such a gene structure may enable the promoters of the LKR/SDH and monofunctional SDH genes to have autonomous patterns of expression as well as to interact with each other.

The complexity of the composite LKR/SDH locus of plants is not restricted to its encoding a bifunctional LKR/SDH and a monofunctional SDH. A complete DNA-sequence analysis of three LKR/SDH-related ESTs from a cotton boll abscission zone cDNA library (URL http://www.genome.clemson.edu/projects/cotton/) showed that one EST encodes a bifunctional LKR/SDH whereas the other two encode another novel enzymatic form, a catabolic monofunctional LKR (G Tang, X Zhu, B Gakiere, G Galili, unpublished data). The cotton monofunctional LKR cDNAs possess identical DNA sequence to the LKR domain of the LKR/SDH cDNA, suggesting that they are also encoded by the composite LKR/SDH locus. The cotton boll abscission zone database contains only 1800 sequenced ESTs. Thus, the relatively high frequency of monofunctional LKR ESTs in this library suggests that production of monofunctional LKR mRNA is upregulated in the abscission zone. Cotton is not the only plant to possess a monofunctional LKR: we have recently identified an *Arabidopsis* EST encoding this novel enzymatic form (G Tang, X Zhu, B Gakiere, G Galili, unpublished data). The mechanism(s) regulating the production of the monofunctional LKR from the composite LKR/SDH locus have yet to be elucidated.

Not all of the composite LKR/SDH loci of plants encode three distinct polypeptides. DNA sequence analysis suggests that although the composite LKR/SDH loci of *Arabidopsis*, rapeseed, cotton and tomato possess autonomous monofunctional SDH genes nested inside them, the loci of maize and soybean do not [5,18••] (G Tang, X Zhu, B Gakiere, G Galili, unpublished data). Expression studies also failed to detect any monofunctional SDH gene product in developing seeds

of maize and soybean [5,7•,11••]. Notably, the differential production of monofunctional SDH in the various plant species is associated with their differential accumulation of lysine catabolic products [16,18••]. The physiological significance of these observations has still to be elucidated. It is also not yet known whether the monofunctional LKR is ubiquitous in all plant species.

The regulation and physiological implication of metabolite flux via LKR and SDH

The biochemical significance of the linkage between LKR and SDH is not yet understood. Fusion of two consecutive enzymes might enhance substrate channeling between them, but biochemical studies do not support such a channeling function for the bifunctional LKR/SDH [5]. An alternative hypothesis is that the linkage between LKR and SDH may enable the modulation of LKR activity by intra-molecular protein–protein interaction with its linked SDH domain. Such a mechanism, as illustrated in Figure 3, may explain the modulation of LKR activity by lysine and Ca^{2+} as well as by protein kinases and phosphatases. If such a mechanism operates *in vivo*, it is expected that the putative association/dissociation between the LKR and SDH domains could also be mimicked *in vitro* by changing the ionic strength of the incubation assay, a factor that modulates non-covalent protein–protein interactions. Indeed, the *in vitro* LKR activities at excess substrate concentration (i.e. at V_{max}) of both maize LKR/SDH [19] and a recombinant *Arabidopsis* LKR/SDH expressed in yeast cells (X Zhu, G Galili, unpublished data) are significantly lower in NaCl-free buffers than in buffers containing 100 mM NaCl. In contrast, a recombinant *Arabidopsis* monofunctional LKR, which is encoded by a deletion construct lacking the linker region and the SDH domain, is not affected by NaCl concentration and its activity buffer is similar to that of the full-length LKR/SDH in the high-NaCl buffer (X Zhu, G Galili, unpublished data). A recombinant LKR/SDH enzyme lacking the linker region between the LKR and SDH domains possesses similar activity to that of the monofunctional LKR. This suggests that the linker region may play a significant role in the putative interaction between the LKR and SDH domains (X Zhu, G Galili, unpublished data). In contrast to the effect SDH has on LKR, the linkage between LKR and SDH seems to have no effect whatsoever on the biochemical properties of SDH [17], including its non-optimal pH, supporting the requirement for additional monofunctional SDH activity to carry out efficient flux of lysine catabolism.

Can monofunctional SDH also interact with monofunctional LKR and thereby modulate the LKR activity? Arruda and colleagues [19] dissected the maize LKR/SDH by limited proteolysis and partially purified the different peptides. They found that peptides derived from the SDH or intermediate domain can inhibit the *in vitro* activity of dissected polypeptides containing only LKR activity. The molar concentration of the SDH or intermediate domain peptides was, however, significantly higher than that of the dissected LKR polypeptide. It is possible that the monofunctional SDH can inhibit the activity of the monofunctional LKR. Being diffusion and concentration dependent, however, this inhibition is much less efficient than that occurring in the bifunctional LKR/SDH in which the LKR and SDH enzymes are forced to be proximal to each other by their linkage.

Figure 3

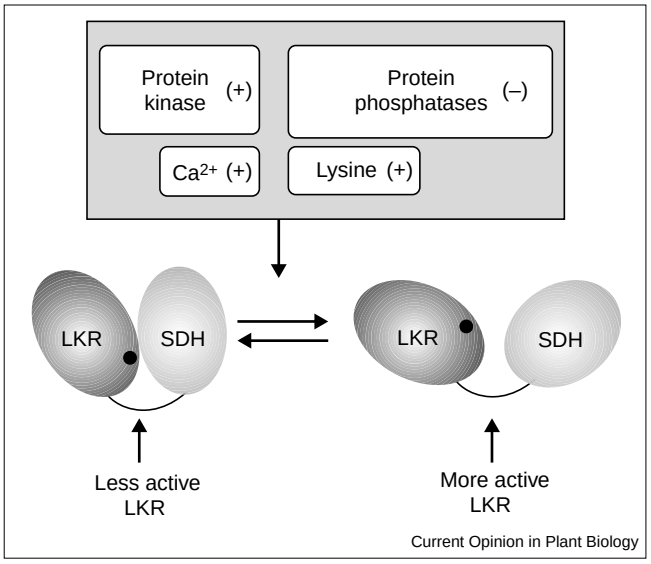

A hypothesis suggesting a conformational modulation of LKR/SDH. Our hypothesis suggests that LKR/SDH may be shuttled *in vivo* between at least two conformational states. In one (left), the SDH enzyme functionally interacts with its linked LKR enzyme and negatively regulates its activity. In the second (right), the SDH and LKR enzymes dissociate from each other, resulting in increased LKR activity. Shuttling between two such confirmations may be regulated *in vivo* by lysine or Ca^{2+}, as well as by protein kinases and phosphatases. (+) and (–) signs indicate factors that are predicted to affect the dissociation or association of the LKR and SDH enzymes, respectively. Similar conformational alterations may explain the variations in the *in vitro* LKR activity of LKR/SDH upon incubation in buffers lacking NaCl (resulting in less active LKR) or containing 100 mM NaCl (resulting in more active LKR). The LKR active site is represented by a black dot.

Taken together, the molecular and biochemical data suggest that there are two different fluxes of lysine catabolism in plants. In some tissues, such as seeds, in which LKR/SDH is apparently the major contributor to the total LKR activity, the flux of lysine catabolism is highly regulated via the modulation of LKR activity by its linked SDH. This regulatory process may control lysine homeostasis through a lysine-dependent stimulation of the LKR activity of the bifunctional LKR/SDH ([6,8]; Figure 3). A transient dominant production of monofunctional SDH and LKR enzymes during abscission and stress conditions may enable a temporary super-efficient flux of lysine catabolism into glutamate. Such a super-efficient flux is expected to be transient because extended catabolism may deplete lysine from the free amino-acid pool. The change

Figure 4

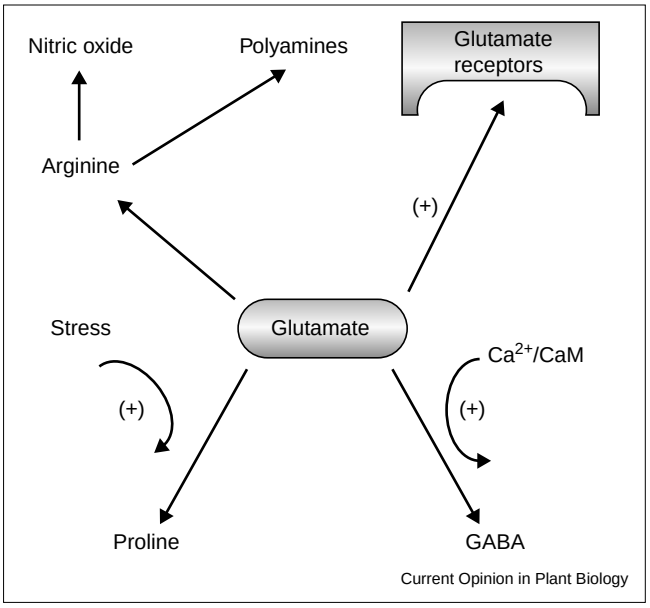

Pathways for conversion of glutamate into various stress-related metabolites. Conversion of glutamate into the strong osmolyte proline occurs primarily via a stress-mediated increase in the activity of D-pyrroline-5-carboxilate synthase [21,22]. Conversion of glutamate into the signaling molecule γ-amino butyric acid (GABA) is carried out by a Ca^{2+}/calmodulin-stimulated glutamate decarboxylase [23]. Conversion of glutamate into the signaling molecule nitric oxide occurs via arginine [24]. Glutamate also acts as a stimulator of glutamate receptors [29,30]. CaM, calmodulin.

in LKR and SDH activities in rapeseed leaves in response to osmotic stress provides experimental support for this hypothesis [20•]. Before the stress response, LKR and SDH activities in rapeseed leaves are relatively low and approximately equal; they are apparently performed by basal levels of bifunctional LKR/SDH. The initial response to osmotic stress includes increased SDH but not LKR activity, which is apparently due to excess production of monofunctional SDH. This increase in SDH activity may allow a slight increase in the flux of lysine catabolism. When the osmotic stress becomes more severe, there is a significant differential increase in LKR activity [20•]. This increase is apparently due to differential production of monofunctional LKR and/or stimulation of LKR activity by phosphorylation. Upon recovery from the stress, LKR activity decreases much faster than that of SDH.

Why do plant need a transient super-efficient flux of lysine catabolism? A plausible explanation is that glutamate, a major product of lysine catabolism, serves as a primary precursor for three important stress-related metabolites. These are proline, a strong osmolyte [21,22]; γ-amino butyric acid, a stress-related signaling molecule [23]; and arginine, which is the potential precursor of the stress-related compounds, polyamines and nitric oxide ([24]; Figure 4). In addition, pipecolic acid, another product of lysine catabolism (Figure 1), is also a strong osmolyte.

In addition to its role as a donor for stress-related metabolites, glutamate may itself act as a signaling molecule. In animals, glutamate is an important component of brain signal transmission, interacting with glutamate receptors on the surfaces of nerve cells [25]. Indeed, lysine catabolism via the α-amino-adipic-acid pathway (Figure 1) also takes place in animal cells and is significantly upregulated in brain tissues [26]. Moreover, defects in LKR or SDH activities in humans are associated with a severe genetic disorder called familial hyperlysinemias [27], which can cause mental retardation [28]. Plants also possess homologues of the animal glutamate receptors, which apparently regulate various developmental and physiological processes [29,30]. Notably, many plant species possess various compounds that act as agonsits and anatogonists of animal glutamate receptors. It has been hypothesized that these compounds may protect plants from herbivores, but they may in fact function via glutamate receptors in regulating plant growth [29,30].

Functional evolution of LKR and SDH

The α-amino-adipic-acid pathway functions in opposite biochemical directions in different organisms. In animals and plants, this pathway is used to catabolize lysine but, in yeast and other fungi, it is used to synthesize lysine [31]. The fungal LKR and SDH (as opposed to those in animals and plants) are monofunctional enzymes encoded by two distinct genes. The fungal anabolic LKR enzymes have much more divergent amino-acid sequences than do the catabolic LKR enzymes of plants and animals, suggesting differential evolution of LKR in fungi compared to that in plants and animals. In contrast to LKR, the SDH enzymes of all species are relatively highly conserved. How are the opposite functions (i.e. catabolism in plants and biosynthesis in fungi) of the α-amino-adipic-acid pathway regulated in these two different groups of organisms? The fungal SDH and LKR enzymes can operate *in vitro* in both anabolic and catabolic directions. The *in vivo* anabolic function of this pathway in fungi is regulated by complex transcriptional and posttranscriptional mechanisms [31], which apparently result in the differential accumulation of precursors favoring the anabolic function of these two enzymes. In plants (and probably in animals too), the catabolic function is apparently regulated by the unidirectional biochemical nature of LKR, for which no anabolic activity could be demonstrated [32•].

Conclusions

Lysine catabolism is emerging as one of the most highly regulated metabolic pathways in plants. Different fluxes of lysine catabolism can apparently be achieved under different developmental and physiological programs via complex transcriptional and posttranscriptional regulation of the composite LKR/SDH locus. Lysine catabolism may serve to regulate lysine homeostasis in some tissues, while efficiently converting lysine to glutamate and then to other stress-related metabolites in response to stress and in certain developmental programs. LKR/SDH-mediated lysine catabolism provides an example in which knowledge from

plant research is far more advanced than that from animals, even though this pathway appears to be important for brain function. Future utilization of LKR/SDH knockout mutants is expected to play a key role in clarifying the physiological significance of lysine catabolism in plants. Moreover, detailed structure–function analysis of the bifunctional LKR/SDH will yield fundamental information about the regulation of lysine catabolism specifically, and the functional significance of bifunctional enzymes generally. The linker region between LKR and SDH, which plays a multi-significant role in the regulation of the bifunctional LKR/SDH enzymes of plants, exists neither in the bifunctional LKR/SDH genes of animals [11••] nor in the separate fungal LKR and SDH genes. This linker region has apparently evolved specifically in plants to regulate plant-specific processes. The elucidation of a possible physiological connection between lysine catabolism and glutamate receptors is also needed. Finally, the molecular mechanisms by which monofunctional LKR and monofunctional SDH mRNAs are produced from the composite LKR/SDH loci of different plant species should be elucidated. It will be interesting to test whether these regulatory mechanisms are specific to LKR/SDH or whether similar mechanisms also exist for bifunctional enzymes in other metabolic processes.

Update

Recent work has demonstrated that lysine is an important precursor for the *de novo* synthesis of glutamate in the mammalian central nervous system [33]. This process is likely catalyzed by LKR/SDH, whose gene is highly expressed in various tissues of the mammalian central nervous system [33]. In addition, Kim *et al.* [34] have shown that overexpression of an *Arabidopsis* homologue of the mammalian glutamate receptor in transgenic *Arabidopsis* alters the Ca^{2+} balance and causes hypersensitivity to ionic stresses. This provides direct proof of the functional role of the newly discovered plant glutamate receptor homologues in plant growth and development.

Acknowledgements

We thank Prof. Jonathan Gressel for critical reading of the manuscript. The research in our laboratory was supported by grants from the FrameWork Program of the Commission of the European Community, and from the Israel Academy of Sciences and Humanities, National Council for Research and Development (grant number BIO4-CT97-2182). GT was supported by a Leon and Kathe Fallek scholarship. GG is an incumbent of the Bronfman Chair of Plant Sciences.

References and recommended reading

Papers of particular interest, published within the annual period of review, have been highlighted as:

- • of special interest
- •• of outstanding interest

1. Brandt AB: ***In vivo*** incorporation of lysine-C^{14} into the endosperm of wild type and high lysine barley. *FEBS Lett* 1975, 52:288-291.

2. Sodek L, Wilson CM: Incorporation of leucine C14 and lysine into protein in the developing endosperm of normal and ***opaque-2*** corn. *Arch Biochem Biophys* 1970, 140:29-38.

3. Gaziola A, Teixeira CMG, Lugli J, Sodek L, Azevedo RA: The enzymology of lysine catabolism in rice seeds. Isolation, characterization, and regulatory properties of a lysine 2-oxoglutarate reductase/saccharopine dehydrogenase bifunctional polypeptide. *Eur J Biochem* 1997, 247:364-371.

4. Goncalves-Butruille M, Szajner P, Torigoi E, Leite A, Arruda P: Purification and characterization of the bifunctional enzyme lysine-ketoglutarate reductase-saccharopine dehydrogenase from maize. *Plant Physiol* 1996, 110:765-771.

5. Miron D, Ben-Yaacov S, Reches C, Schupper A, Galili G: Purification and characterization of bifunctional lysine-ketoglutarate reductase/saccharopine dehydrogenase from developing soybean seeds. *Plant Physiol* 2000, 123:655-663.

6. Karchi H, Shaul O, Galili G: Lysine synthesis and catabolism are coordinately regulated during tobacco seed development. *Proc Natl Acad Sci USA* 1994, 91:2577-2581.

7. • Arruda P, Kemper EL, Papes F, Leite A: Regulation of lysine catabolism in higher plants. *Trends Plant Sci* 2000, 5:324-330.
A timely review of lysine catabolism in plants focusing mainly, but not entirely, on biochemical aspects of LKR and SDH.

8. Karchi H, Miron D, Ben-Yaacov S, Galili G: The lysine-dependent stimulation of lysine catabolism in tobacco seeds requires calcium and protein phosphorylation. *Plant Cell* 1995, 7:1963-1970.

9. Miron D, Ben-Yaacov S, Karchi H, Galili G: ***In vitro*** dephosphorylation inhibits the activity of soybean lysine-ketoglutarate reductase in a lysine-regulated manner. *Plant J* 1997, 12:1453-1458.

10. Tang G, Miron D, Zhu-Shimoni JX, Galili G: Regulation of lysine catabolism through lysine-ketoglutarate reductase and saccharopine dehydrogenase in ***Arabidopsis***. *Plant Cell* 1997, 9:1305-1316.

11. •• Kemper EL, Neto GC, Papes F, Moraes KC, Leite A, Arruda P: The role of Opaque2 in the control of lysine-degrading activities in developing maize endosperm. *Plant Cell* 1999, 11:1981-1994.
The authors of this paper demonstrate that LKR/SDH gene expression in maize is regulated by the Opaque-2 transcription factor, which also controls the expression of some zein storage-protein genes. The *in situ* localization pattern of LKR/SDH (as observed using SDH-activity staining) in the developing maize endosperm is, however, different to that of zeins.

12. Muth JR, Muller M, Lohmer S, Salamini F, Thompson RD: The role of multiple binding sites in the activation of zein gene expression by Opaque-2. *Mol Gen Genet* 1996, 252:723-732.

13. Schmidt RJ, Ketudat M, Aukerman MJ, Hoschek G: Opaque-2 is a transcription activator that recognizes a specific site in 22-kD zein genes. *Plant Cell* 1992, 4:689-700.

14. Lending CR, Larkins BA: Changes in zein composition of protein bodies during maize endosperm development. *Plant Cell* 1989, 1:1011-1023.

15. • Mazur B, Krebbers E, Tingey S: Gene discovery and product development for grain quality traits. *Science* 1999, 285:372-375.
A timely review dealing with the production of high-lysine transgenic crop plants. This review stresses the problems associated with lysine catabolism in plant seeds.

16. Deleu C, Coustaut M, Niogert M-F, Larpher F: Three new osmotic stress-regulated cDNAs identified by differential display polymerase chain reaction in rapeseed leaf discs. *Plant Cell Environ* 1999, 22:979-988.

17. Zhu X, Tang G, Galili G: Characterization of the two saccharopine dehydrogenase isozymes of lysine catabolism encoded by the single composite ***AtLKR/SDH*** locus of ***Arabidopsis***. *Plant Physiol* 2000, 124:1363-1372.

18. •• Tang G, Zhu X, Tang X, Galili G: A novel composite locus of ***Arabidopsis*** encoding simultaneously two polypeptides with metabolically related but distinct functions in lysine catabolism. *Plant J* 2000, 21:1-10.
This article is the first to show that *Arabidopsis* plants possess a composite LKR/SDH locus whose expression provides a novel mechanism of metabolic regulation.

19. Kemper EL, Cord-Neto G, Capella AN, Goncalves-Butruile M, Azevedo RA, Arruda P: Structure and regulation of the bifunctional enzyme lysine-oxoglutarate reductase-saccharopine dehydrogenase in maize. *Eur J Biochem* 1998, 253:720-729.

20. Moulin M, Deleu C, Larher F: ***L***-lysine catabolism is osmo-regulated
• at the level of lysine-ketoglutarate reductase and saccharopine dehydrogenase in rapeseed leaf discs. *Plant Physiol Biochem* 2000, **38**:577-585.

The authors of this paper describe modulations in LKR and SDH activities upon entrance of rapeseed leaves into osmotic stress and upon their recovery from this stress. Changes in LKR and SDH activities are not coordinated with each other, suggesting that both the bifunctional LKR/SDH and the monofunctional LKR and SDH enzymes may be involved in this process.

21. Hare PD, Cress WA: Metabolic implications of stress-induced proline accumulation in plants. *Plant Growth Reg* 1997, **21**:79-102.

22. Nuccio ML, Rhodes D, McNeil SD, Hanson AD: Metabolic engineering of plants for osmotic stress resistance. *Curr Opin Plant Biol* 1999, **2**:128-134.

23. Baum G, Lev-Yadun S, Fridmann Y, Arazi T, Katsenelson H, Zik M, Fromm H: Calmodulin binding to glutamate decarboxylase is required for regulation of glutamate and GABA metabolism and normal development in plants. *EMBO J* 1996, **15**:2988-2996.

24. Klessig DF, Durner J, Noad R, Navarre DA, Wendehenne D, Kumar D, Zhou JM, Shah J, Zhang S, Kachroo P *et al.*: Nitric oxide and salicylic acid signaling in plant defense. *Proc Natl Acad Sci USA* 2000, **97**:8849-8855.

25. Platenik J, Kuramoto N, Yoneda Y: Molecular mechanisms associated with long-term consolidation of the NMDA signals. *Life Sci* 2000, **67**:335-364.

26. Rao VV, Pan X, Chang YF: Developmental changes in ***L***-lysine-ketoglutarate reductase in rat brain and liver. *Comp Biochem Physiol* 1992, **103B**:221-224.

27. Markovitz PJ, Chuang DT, Cox RP: Familial hyperlysinemias: purification and characterization of the bifunctional aminoadipic semialdehyde synthase with lysine-ketoglutarate reductase and saccharopine dehydrogenase activities. *J Biol Chem* 1984, **259**:11643-11646.

28. Woody NC: Hyperlysinemia. *Am J Dis Child* 1964, **108**:543.

29. Lam HM, Chiu J, Hsieh MH, Meisel L, Oliveira IC, Shin M, Coruzzi G: Glutamate-receptor genes in plants. *Nature* 1998, **396**:125-126.

30. Brenner ED, Martinez-Baboza N, Clark AP, Liang QS, Stevenson D, Coruzzi GM: ***Arabidopsis*** mutants resistant to S(+)-beta-methyl-alpha, beta-diaminopropionic acid, a cycad-derived glutamate receptor agonist. *Plant Physiol* 2000, **124**:1615-1624.

31. Hinnebusch AG: General and pathway-specific regulatory mechanisms controlling the synthesis of amino acid biosynthetic enzymes in ***Saccharomyces cerevisiae***: gene expression. In *The Molecular and Cellular Biology of the Yeast* Saccharomyces. Edited by Jones EW, Pringle JR, Broach JR. Cold Spring Harbor: Cold Spring Harbor Laboratory; 1992:319-419.

32. Zhu X, Tang G, Galili G: The catabolic function of the α-amino
• adipic acid pathway in plants is associated with unidirectional activity of lysine-ketoglutarate reductase but not saccharopine dehydrogenase. *Biochem J* 2000, **351**:215-220.

This article deals with the functional evolution of the α-amino-adipic-acid pathway. This pathway is anabolic (i.e. synthesizing lysine) in yeast and other fungi, whereas it is catabolic (i.e. degrading lysine) in plants and animals. LKR seems to be the major regulator of the opposite direction of this pathway in fungi, animals and plants. The LKRs of plants and animals have much greater similarity to each other than to the anabolic fungal LKRs. The plant enzyme (and likely the animal enzymes) has adopted a special structure rendering it a unidirectional catabolic enzyme.

33. Papes F, Surpili MJ, Langone F, Trigo JR, Arruda P: The essential amino acid lysine acts as precursor of glutamate in the mammalian central nervous system. *FEBS Lett* 2001, **488**:34-38.

34. Kim SA, Kwak JM, Jae SK, Wang MH, Nam HG: Overexpression of the ***AtGluR2*** gene encoding an ***Arabidopsis*** homolog of mammalian glutamate receptors impairs calcium utilization and sensitivity to ionic stress in transgenic plants. *Plant Cell Physiol* 2001, **15**:74-84.